Electrolux PROFESSIONAL

Flexy Compact
Tempered glass top on cupboard (2GN) with wheels, overshelf with LED lights, H=750mm

ITEM #

MODEL #

NAME #

SIS #

AIA #

322057 (F04H2KW02S)	Tempered glass top on cupboard (2 GN container capacity) with wheels, overshelf with LED lights and two stainless steel tray sliders, H=750mm (Nordic)

Short Form Specification

Item No.

Compact design, ideal for space saving environments. AISI 304 Foldable tray sliders on long sides. Unit mounted on 125 mm wheels 2 swivel and 2 with brakes. Soft closing doors on operator side. Underneath ambient cupboard with doors. A type AISI 304 overshelf equipped with LED lights designed for extra increased visibility on the surface for charming food display. Sleek, minimalist glass structure, food and dust does not get trapped and easy to clean. Curved glass. Sturdy body construction with laminated panelings on 4 sides. Designed to serve the food in plates, casseroles, pans. Electronic overheating protection. Digital control with temperature display with precise adjustment (0,1°C). Fully compliant HACCP digital controls include visible alarms. Special design etched foil heating elements to maximize heat transmission on the surface for having the same temperature on the whole surface. Ideal for elegant buffet to display warm food, such as pizza, bun, etc. thanks to the extended surface top. It comes with stylish black coloured tempered heated glass with integrated etched foil elements and stainless steel framed. AISI 304 Stainless steel frame with rounded corners to facilitate cleaning operations. Heating elements connected to the bottom include safety thermostat. Food introduced at the correct temperature maintains its core temperature according to Afnor Standards. 750mm worktop height.

APPROVAL:

Main Features

- Electronic overheating protection.
- Precise temperature control and setting at 0,1°C .
- As standard the product comes with digitally controlled thermostat which is in line of HACCP norms and provides visual alarm as a warning of the increasing or decreasing temperatures.
- Available drop-in dimensions: 1, 2, 3, 4, 5, 6 GN.
- Designed to serve the food in plates, casseroles, pans
- It comes with stylish black coloured tempered heated glass with integrated etched foil elements and stainless steel framed.
- Special design etched foil heating elements to maximize heat transmission on the surface for having the same temperature on the whole surface.
- Ideal for elegant buffet to display warm food, such as pizza, bun, etc. thanks to the extended surface top.
- Perfect compact design makes it ideal for space saving environments.
- CB and CE certifed by a third party notified body.
- Soft closing doors on operator side.
- Underneath ambient cupboard with doors ideal for extra storage.
- Available options with online configurator: colors, tray sliders, overshelves, feet/wheels with desired diameter, height 750mm for kids.
- Glass insertions does not include any clamps and brackets making them very easy to clean.
- Overshelf equipped with LED lights.
- Optional plinth can be installed to cover the feet or the wheels.
- AISI 304 Tray slider in flush mounted stainless steel is installed on long sides and they can also be folded down to facilitate passage of the units through doorways.
- Ideal for servery lines without an operator.
- Unit mounted on 125 mm wheels 2 swivel and 2 with brakes.
- Stylish A type overshelf designed for extra increased visibility on the surface for charming food display.
- Curved glass.
- Food introduced at the correct temperature maintains its core temperature according to Afnor Standards.
- Available dimensions: 2, 3, 4 GN.
- Thanks to the sleek, minimalist glass structure, food and dust does not get trapped and the cleaning is made easier.

Construction

- Electronic control with temperature display.
- AISI 304 Stainless steel frame with rounded corners to facilitate cleaning operations
- Overshelf in complete AISI 304.
- Top in AISI 304.
- Sturdy construction with laminated panelings on 4

sides.

- Heating elements connected to the bottom include safety thermostat.

The company reserves the right to make modifications to the products without prior notice. All information correct at time of printing.

Electrolux PROFESSIONAL

Flexy Compact
Tempered glass top on cupboard (2GN) with wheels, overshelf with LED lights, H=750mm

Front

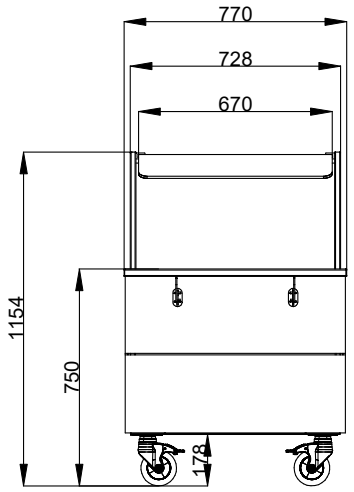

Side

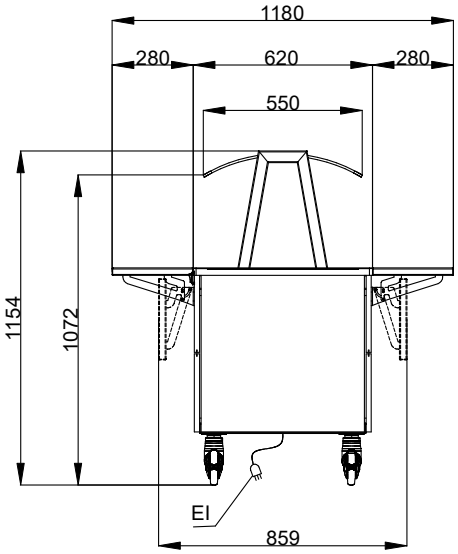

EI = Electrical inlet (power)

Top

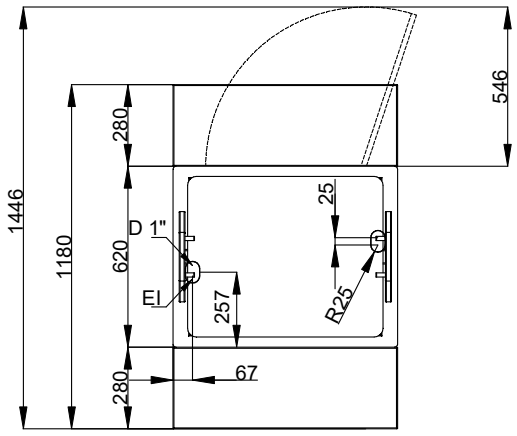

Electric

Supply voltage:	220-240 V/1N ph/50/60 Hz
Electrical power, max:	0.62 kW

Key Information:

N° of doors:	1
External dimensions, Width:	770 mm
External dimensions, Depth:	1180 mm
External dimensions, Height:	1154 mm
Net weight:	82 kg
Shipping height:	1184 mm
Shipping width:	810 mm
Shipping depth:	899 mm
Shipping volume:	0.86 m³
Set temperature:	+105 / +115 °C
Top temperature:	+105 / +115 °C

Sustainability

Noise level:	0 dBA

The company reserves the right to make modifications to the products without prior notice. All information correct at time of printing.

2026.03.09